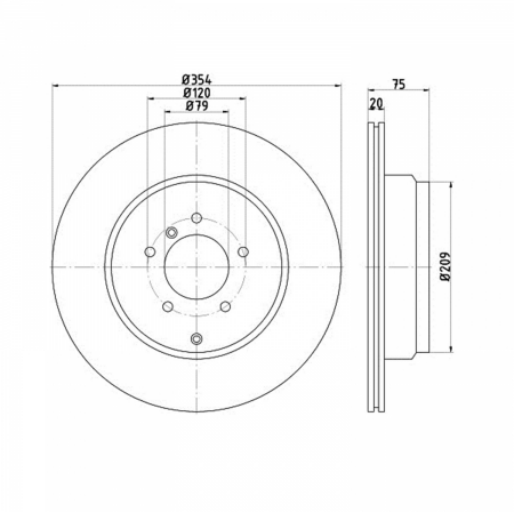

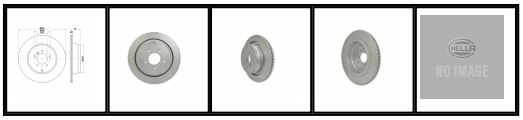

RR BD FOR RR III,RR VOGUE REAR DISC

Part Number - 355.115-291

MRP : INR 8208

Details

- OE quality product.
- Attractive graphical packaging.
- Complete European range.

Warranty

Warranty Description:-	N/A

Address:
Hella India Lighting Ltd.
6A, 6th Floor, 184, Platinum Tower
Udyog Vihar Phase I
Gurugram- 122016 (Haryana)
Phone: +91 124 4658600
Email ID: careindia.iam@hella.com
Toll-Free: 1800 103 5405

Motoring Partner
GOMOTORING
Road Safety Partner
CLUB D2S
An NGO for Road Safety

Social Media
/hellaIndia
/hellaindiaiam
/company/hellaindialighting
/hellaIndia

Partners
HELLA GUTMANN DIAGNOSTICS SOLUTIONS
BEHR HELLA SERVICE
HELLA DiGi FRIEND WMS
HELLA PAGID BRAKE SYSTEMS
eConnect Digitise-Analyse-Grow